R for Rabbit®
The Amazing Baby Company

Baby Cradle

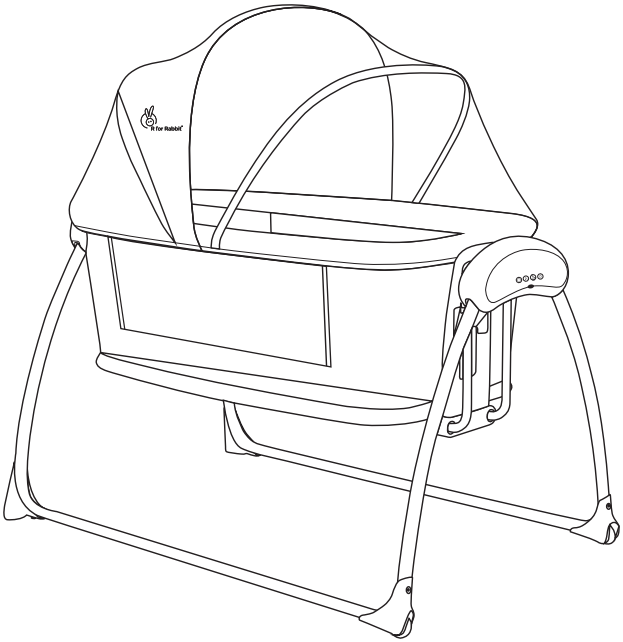

*Sketch shown is for illustrative purposes only. Actual product may vary from image.
Batteries are not included.

LULLABIES SMART

4 in 1 Multipurpose Baby Cradle

AMERICAN STANDARDS SAFETY CERTIFIED

Age Group **0-2 Yrs**

Weight Capacity **Upto 15 Kgs**

Installation & User Manual

IMPORTANT - KEEP THESE INSTRUCTIONS FOR FUTURE REFERENCE.
FAILURE TO OBSERVE THESE INSTRUCTIONS MAY AFFECT THE SAFETY OF YOUR CHILD!

Parts

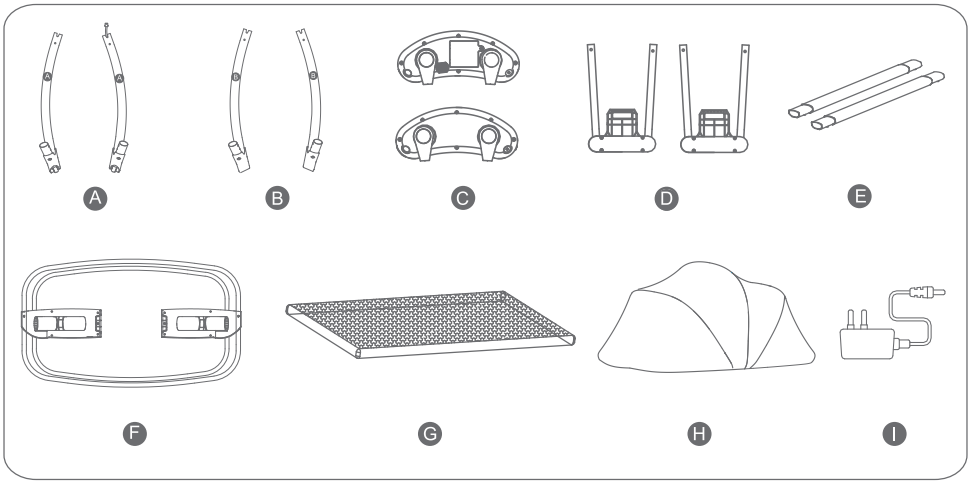

A. left upper box bracket
B. Right upper box bracket
C. Left and right upper box
D. Hanging tubes x 2
E. Legs x 2
F. Frame
G. Cotton pad
H. Canopy
I. Power Adapter

Remote control function

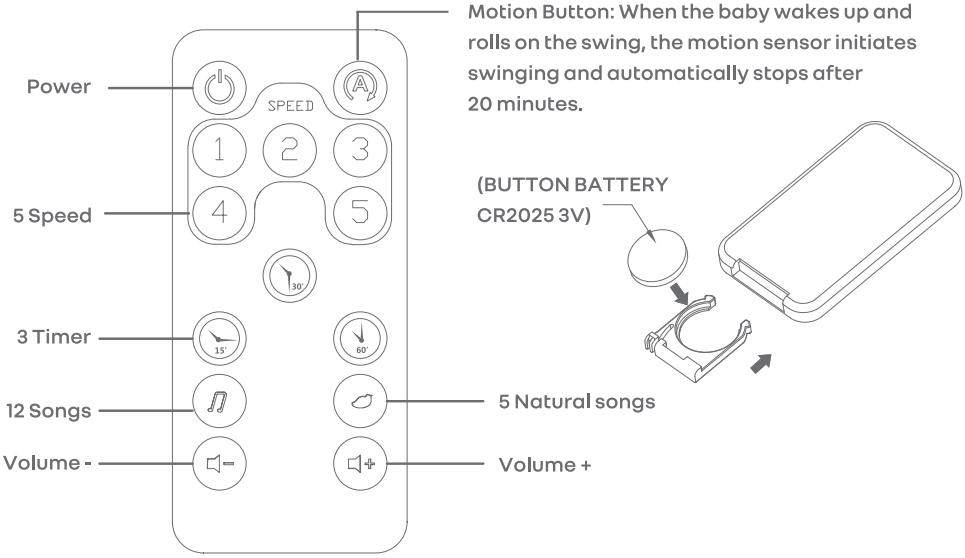

Installation

1. Connect one of the left upper box bracket tubes labelled "A" to the left upper box connecting wire, as illustrated in Fig. 1. Then, insert the other left upper box bracket (support tube) labelled "A" into the corresponding positions of the upper left box, ensuring they click into place, as shown in Fig. 2. Finally, open the left bracket assemblage, as depicted in Fig. 3, until they reach the state shown in Fig. 4.

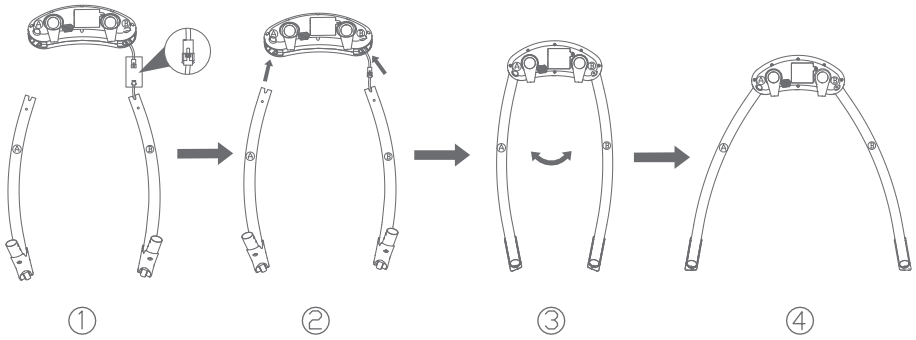

2. Connect the right upper box bracket tubes labelled "B" to the right upper box, as illustrated in Fig. 1, and ensure they click into place as depicted in Fig. 2. Finally, open the right bracket assemblage until they reach the state shown in Fig. 3.

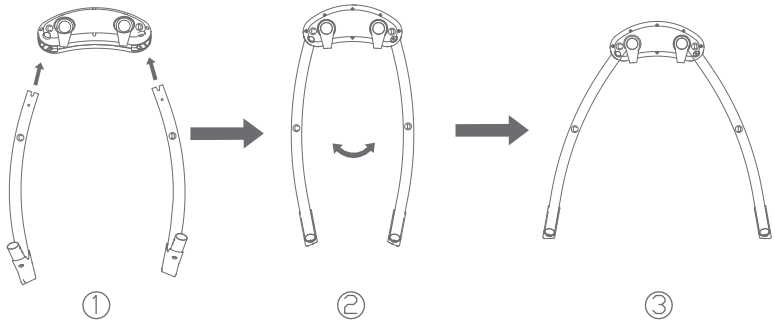

3. Connect the hanging tubes labelled "D" to the left and right bracket assemblages of steps 1 and 2 as depicted in the figure until a click sound is heard.

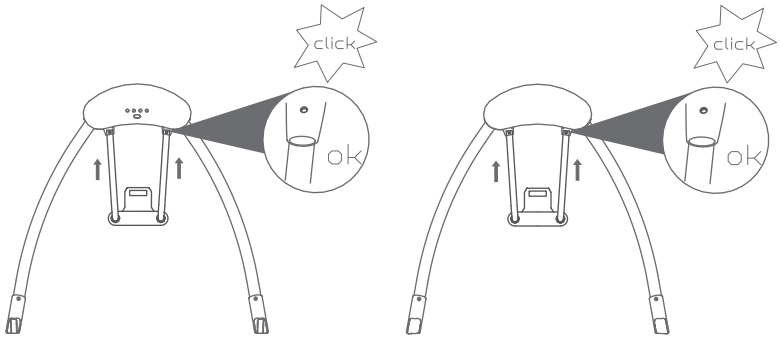

4. Now, place both the left and right bracket assemblages opposite each other in order to connect the legs "E" so as to obtain the bassinet support as depicted in the figure. Insert the legs at both ends until a click sound is heard.

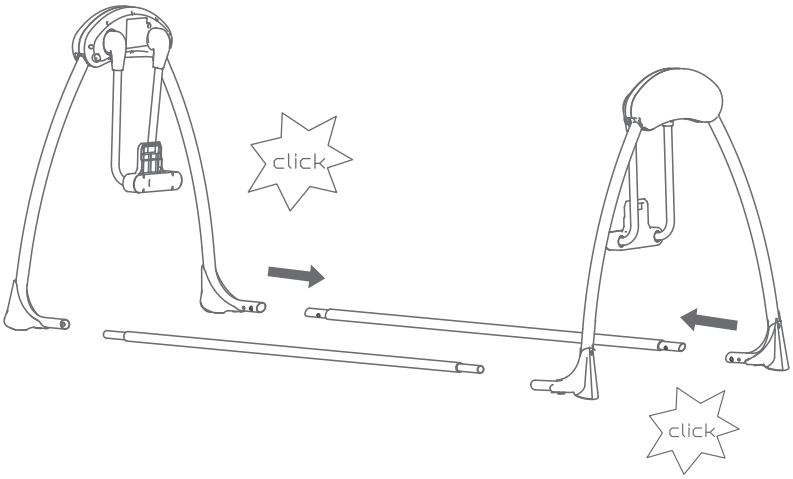

5. Open the frame to obtain the lower frame of the cradle by pushing it vertically downwards, as depicted in the figure.

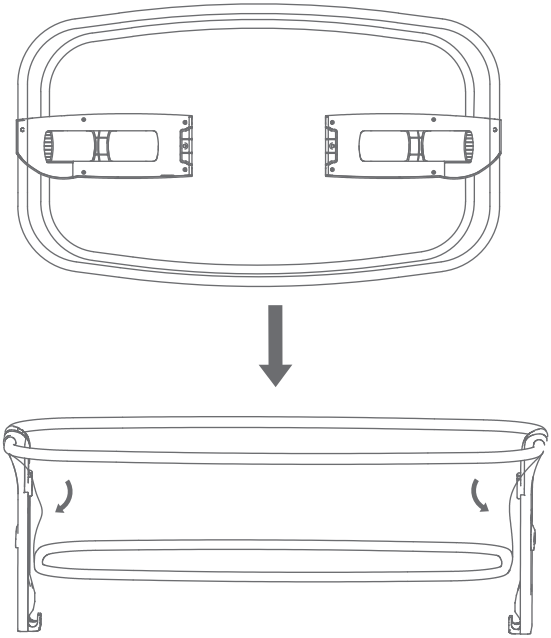

6. Fix the plastic parts on both sides of the lower frame of the cradle at the left and right sides of the support frame slots, as shown in the figure.

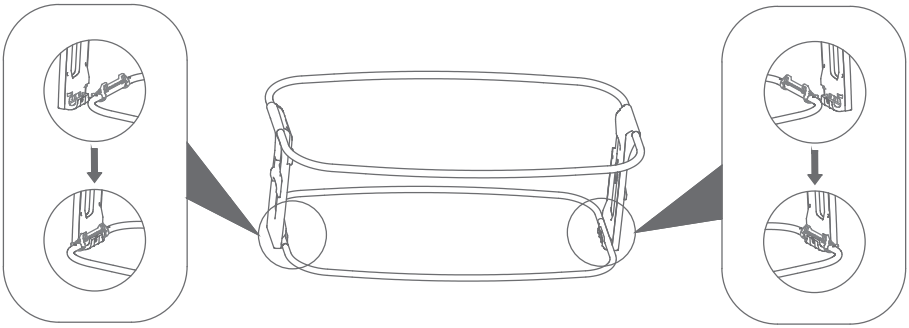

7.Attach the lower frame of the cradle of step 6 to the supportive frame assemblage of step 4, as shown in the figure, by securing both sides of the bassinet to the respective sides of the frame assemblage until it seems fixed.

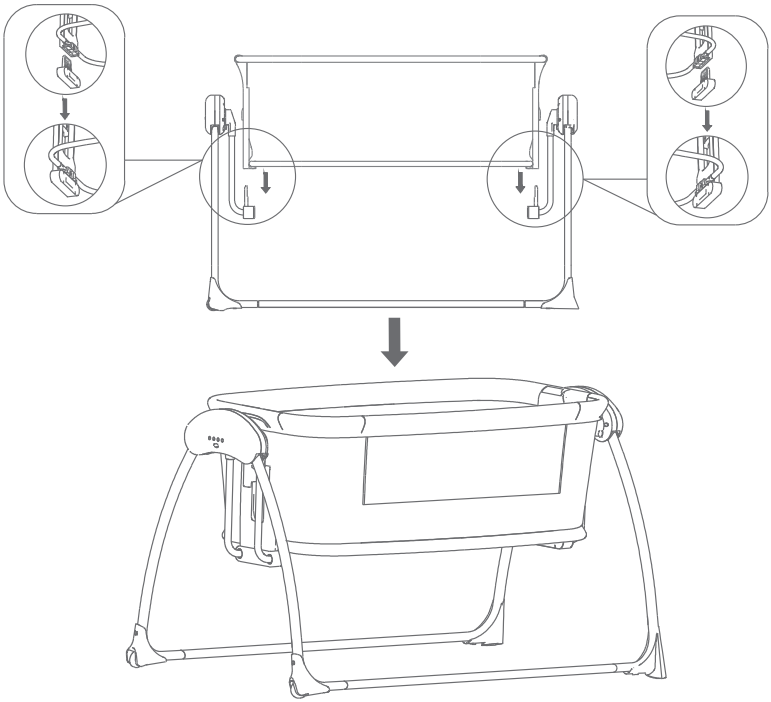

8. Attach the canopy by securing the large white buckle on both sides of the basket, and then proceed to wrap the canopy and tent yarn around the bassinet on each side.

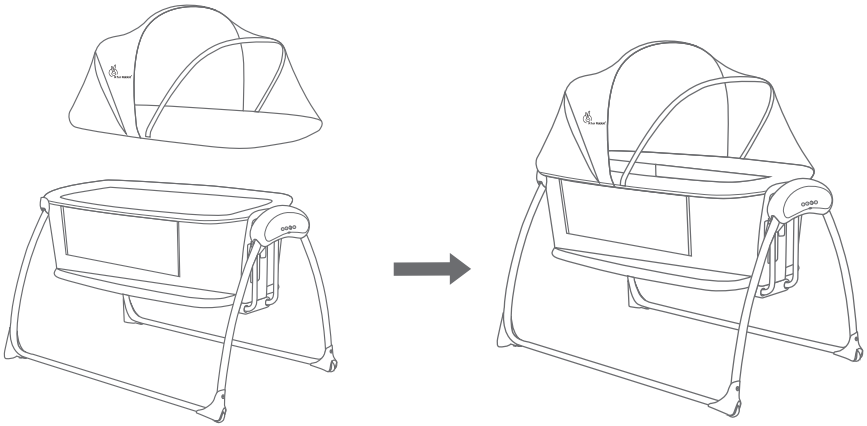

9. Connect the charger by inserting the charger connector into the DC charging port of the left holder, as shown in the figure, and then plug the charging head into the power outlet.

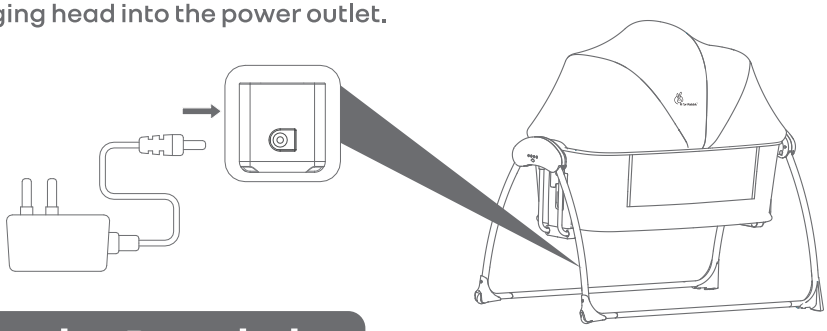

Function Description

1. To activate the single-side lowering function of the frame, unzip both sides of the fabric cover as shown in Fig. a. Now, fold the folding button inward and then raise the support tube upward, as shown in Fig. Finally, roll up and secure the support pipe cloth sleeve in the designated limit positions on both sides, as depicted in Fig.

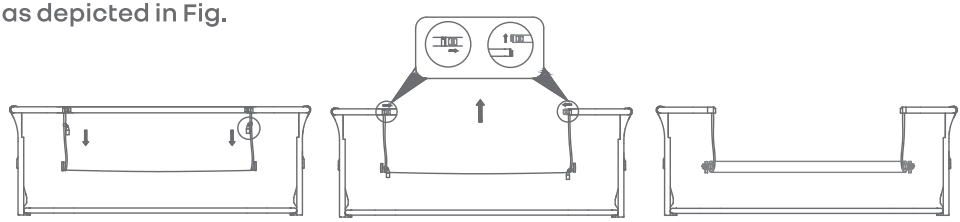

ⓐ ⓑ ⓒ

2.Activate the stop function by turning on both the left and right stop buttons; this ensures that the frame remains stationary and does not sway from side to side, as depicted in the figure.

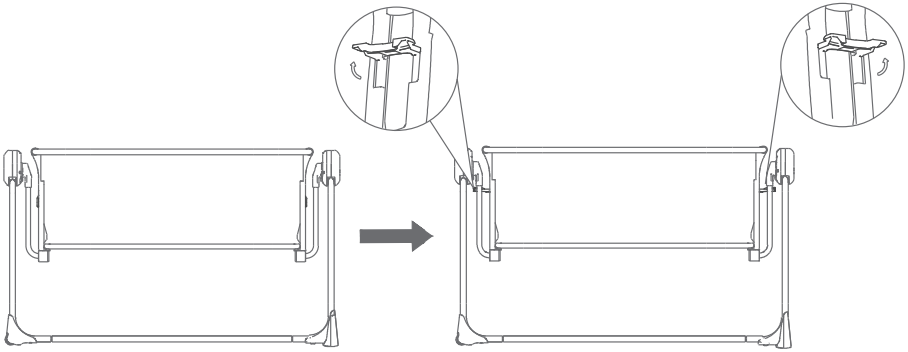

ⓐ ⓑ

3. When transitioning to the game bed function, be sure to activate the anti-roll button for added safety and follow the steps as mentioned below.

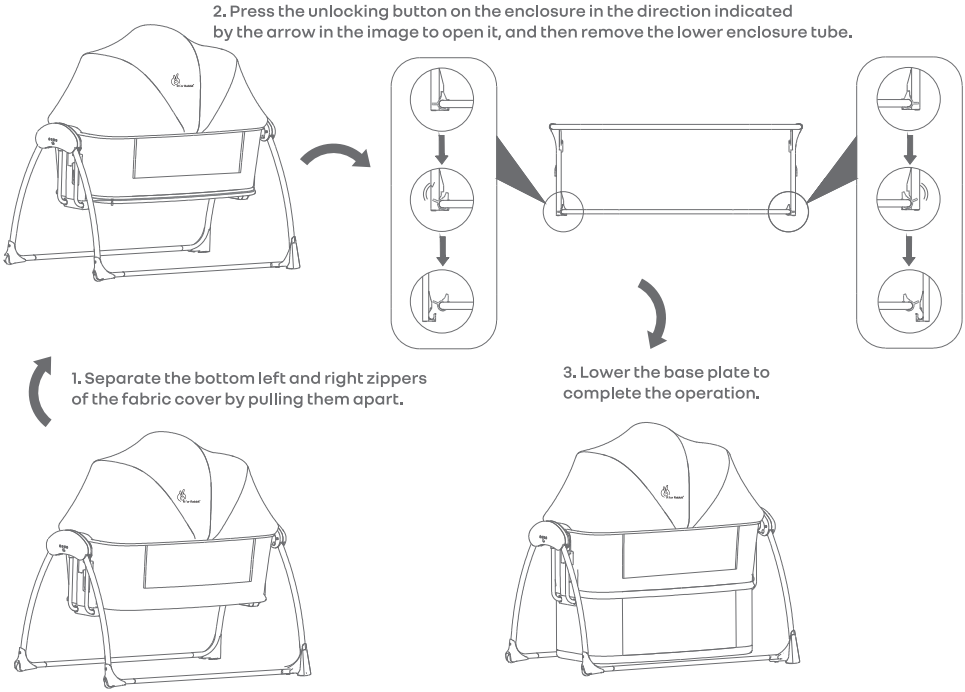

4. Disassemble the frame by lifting the frame components upward after pressing the left and right frame handles upward.

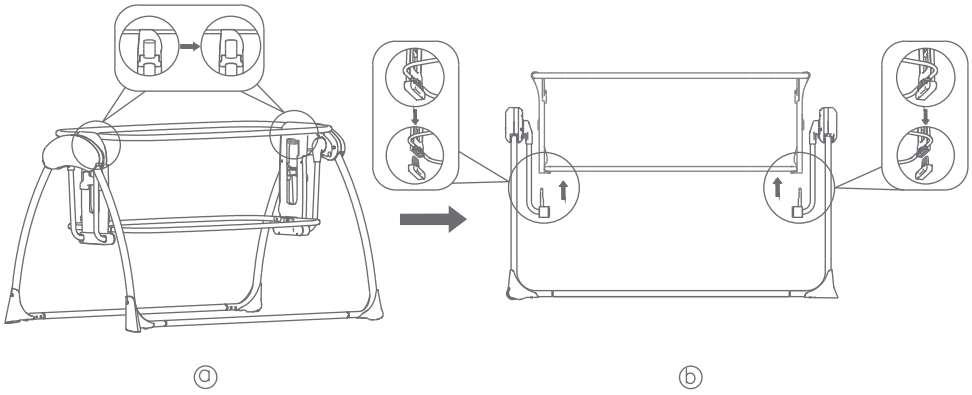

Battery assembly

Re-place the battery compartment door and tighten the screws.

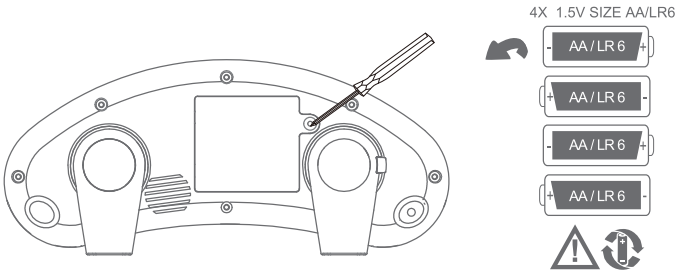

Note: If you notice slowed product movement, faint sound and lights, or complete shutdown, it may indicate low battery power. In such cases, utilize the AC adapter for power or swap out the batteries with four AA (LR76) alkaline batteries.

*If the product starts to function erratically, consider resetting the electronics by turning the power off and then on again.

Swing control plate instructions

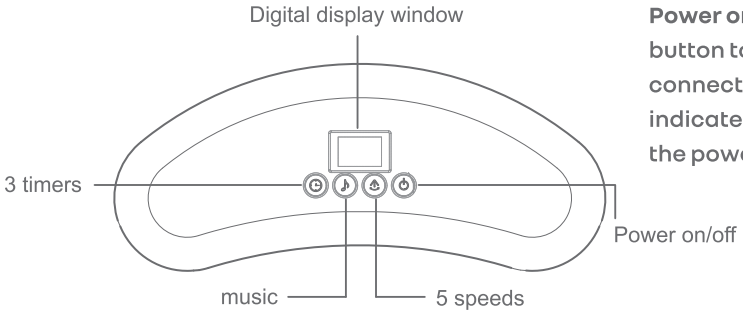

Power on/off: Simply press the button to activate the cradle's connection to power which is indicated by the turning on of the power light.

Music button: Use this to cycle through 12 melodies, adjusting volume levels with each press.
Speed button: It allows selection from 5 speeds, each indicated by corresponding light. Pressing the speed button while on the fifth speed stops the swinging motion.
Timer button: Control the timer with timer button, cycling through 15, 30, and 60-minute intervals, each represented by a timer light.
Digital Display: Access the digital display to view the current speed or timer setting by pressing the respective buttons. Activate the Bluetooth function on your phone by searching for the device named "Maribel" to initiate pairing, and listen for the confirmation sound "ding dong" indicating successful pairing.

Maintenance Suggestion

1. The mattress cover and fabric lining are removable and washable.
2. Only adults should handle the assembly and disassembly of this product to avoid damage.
3. If any components are damaged, refrain from using the product.
4. Keep it away from children.
5. Avoid using dissolvable or corrosive substances when washing the mattress cover and fabric lining.

⚠ WARNINGS

1. DO NOT use this once your child can sit up unaided or weighs more than 15 kg.
2. DO NOT use this product without reading the instructions for use.
Placing additional items in the product may cause suffocation.
3. DO NOT use it if any part is broken, torn, or missing. Contact the seller for a replacement, if required.
4. Only use the substitute parts that are provided or confirmed by the manufacturer.
5. Please do not use any accessories that are not included in the product.
6. Before assembling, please make sure that all accessories of this product are not damaged during the transportation.
7. If any accessories are damaged, keep them away from children and ensure proper use of the product.
8. Please keep this product away from any source of fire or heat, including heating electrical appliances, gas fires, and so on.
9. Please carefully check whether the product is completely fixed, ensuring that all fixtures must be properly installed before using this product.
10. This product is suitable for a child who cannot sit up unaided. Please stop using the product immediately when the child can sit, kneel, or push the product.
11. The distance between the mattress and the top part of the bed should not be less than 20 cm and only one mattress can be used in this product.
12. Please make sure the new mattress matches this product if you need to buy a separate mattress.
13. Use a mattress with a suitable thickness according to the intimal mark within this product.
14. Do not place any objects in the bed that may reduce its internal depth.
15. Do not place the product close to another product, which could pose a danger.
of suffocation or strangulation, e.g., strings, blind/curtain cords, etc.
16. When using this product, please do not adjust the product or change the position of the product.
17. Only use on firm ground that is horizontal, level, and dry.
18. This product is only meant for one child at a time.
19. Do not let other children play unattended near the carrycot and stand.
20. Do not leave flexible carrying handles inside the carry cot.

PLAYPEN WARNING: NEVER LEAVE THE CHILD UNATTENDED, EVEN WHEN IT IS ASLEEP.

Infants may Suffocate

Ensure safety by avoiding gaps between the mattress and product sides, not adding extra bedding, and using only the provided mattress.

1.This playpen can be used for 0 to 24 months (weight up to 15 kg).
2.Do not place the playpen close to an open fire or other heat source.
3.Do not use the playpen without the base.
4.Ensure that the playpen is fully assembled and all the locking mechanisms are engaged before placing your child in this playpen.
5.There is a risk of leaving anything in the playpen as it could create a danger of suffocation or strangulation.
6.All assembly fittings should always be tightened properly.
7.DO NOT use the playpen if any part is broken, torn, or missing, and use only spare parts that are approved by the manufacturer;
8.Accessories that are not approved by the manufacturer should not be used.
9.Do not use more than one mattress in the product.
10.When the child can sit, kneel, or stand up, the base plate should be used with the lowest setting at all times.

R for Rabbit®
The Amazing Baby Company

Imported, Designed & Marketed By:
R FOR RABBIT BABY PRODUCTS PVT. LTD.
307, 3rd Floor, Pinnacle Business Park, Corporate Road,
Prahladnagar, Ahmedabad, Gujarat,India- 380015.
+91-734-834-0934 | 734-834-9340 www.rforrabbit.com
customercare@rforrabbit.com Find Us on:

For Installation Video

Scan QR or Visit YouTube

Search for Product Details

R for Rabbit Lullabies Smart