R for Rabbit®
The Amazing Baby Company

Baby Cradle

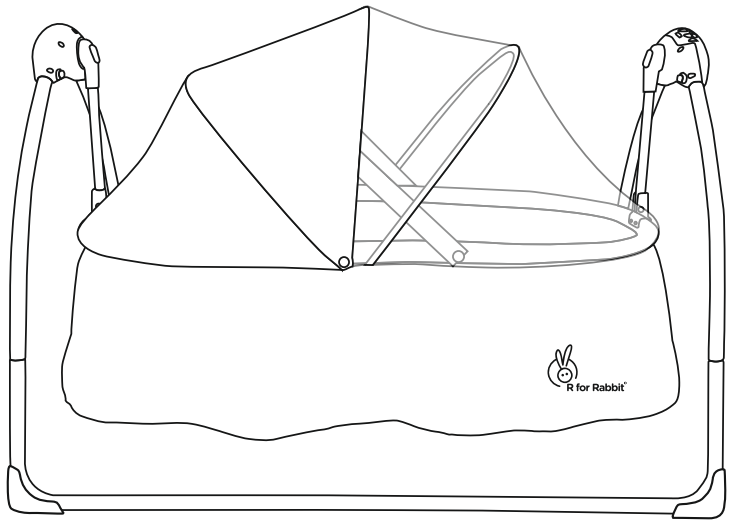

*Picture shown is for illustrative purposes only. Actual color of product may vary slightly from image.
Batteries are not included with this product.

LULLABIES

The Auto Swing Baby Cradle

EN-1130 Safety Certified

Age Group 0-2 Yrs

Weight Capacity Upto 12 Kgs

Installation & User Manual

IMPORTANT - KEEP THESE INSTRUCTIONS FOR FUTURE REFERENCE.
FAILURE TO OBSERVE THESE INSTRUCTIONS MAY AFFECT THE SAFETY OF YOUR CHILD!

For Installation Video

Scan QR or Visit YouTube

Search for Product Details

R for Rabbit Lullabies

R for Rabbit®
The Amazing Baby Company

Imported & Marketed By: R FOR RABBIT BABY PRODUCTS PVT. LTD.
307, 3rd Floor, Pinnacle Business Park, Corporate Road, Prahladnagar, Ahmedabad, Gujarat, India- 380015. For Customer support:
+91-734-834-0934 | 734-834-9340 www.rforrabbit.com
customercare@rforrabbit.com | Find us on:

PARTS LIST

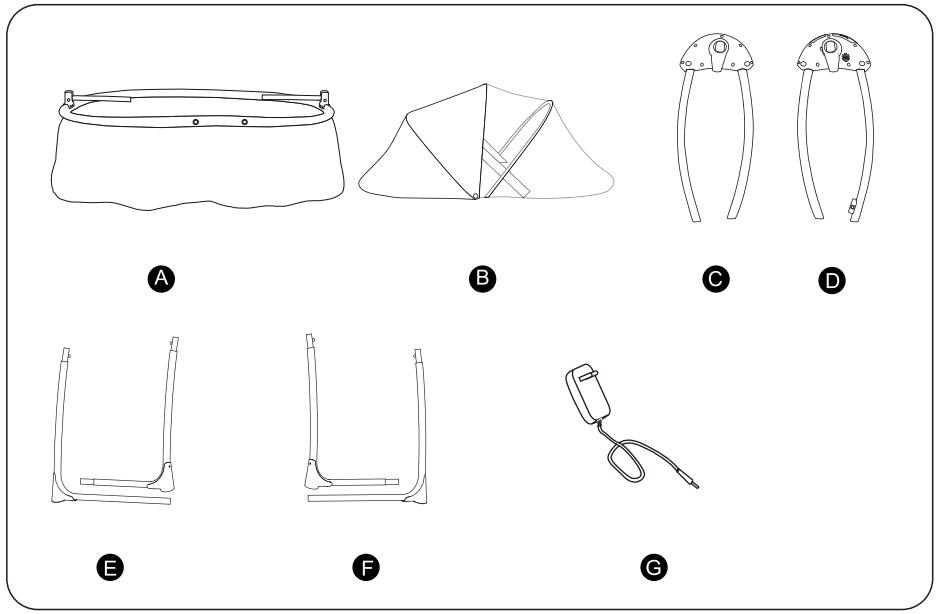

A. Bassinet

B. Canopy and Net

C. Left Support Arch

D. Right Support Arch

E. Front Support Leg

F. Rear Support Leg

G. Adapter (if supplied)

WARNING

Read this instruction carefully before using and keep it for future reference.
Failure to follow these warnings and the assembly instruction could result in unwanted injury.
Products need to be installed by adult and used under adult's supervision.
1.Do not use the product if any parts are broken, torn or missing and use only spare parts approved by the manufacturer.
2.Always use harness.
3.Never leave child unattended.
4.Stop using product when child attempts to climb out or reaches 12kg weight.
5.It is dangerous to place this product on an elevated surface. Always use on a flat or level floor.
6.Be aware of the risk of open fire and other sources of strong heat, such as electric bar fires, gas fires, etc. In the vicinity of the product.
7.This product does not intend for prolonged period of sleep. If your child needs to sleep, then place the child in a suitable cot or bed.
8.Do not use the product without the seat cushion.
9.Discontinue using your product if it is damaged or broken.

FOR SAFE BATTERY USE

1.Keep the batteries out of children's reach.
2.Only the recommended batteries equivalent in volt and size are to be used.
3.Batteries are inserted with the correct polarity.
4.Remove exhausted batteries from the product.
5.Do not short-circuit supply terminals.
6.Rechargeable batteries are to be removed before being charged.
7.Rechargeable batteries are only to be charged under adult supervision.
8.Any battery may leak battery acid if mixed with a different battery type, if inserted incorrectly (put in back-wards) or if all batteries are not replaced or recharged at the same time. Do not mix old and new batteries. Do not mix alkaline, standard (carbon-zinc) or rechargeable(nickel-cadmium) batteries.
9.Any battery may leak battery acid or explode if disposed of in fire or an attempt is made to charge a battery not intended to be recharged.
10.Never recharge a cell of one type in a recharger made for a cell of another type.
11.Discard leaky batteries immediately. Leaky batteries can cause skin burns or other personal injury. When discarding batteries, be sure to dispose of them in the proper manner, according to your state and local regulations.
12.Always remove batteries if the product is not going to be used for a month or more. Batteries left in the unit may leak and cause damage.
13.Recommended type batteries-alkaline disposables, size aa(lr6-1.5v).
Never mix battery types. Change batteries when product ceases to operate satisfactorily.

OPERATION BOARD INSTRUCTION

A .Power on/off

B.Speed button.5 speeds,from slow to fast

（Press 5th speed and press again to stop）

C.Music button,12 songs.

(Press to start from 1st song, Press again to move to next

Press longer for 3-5 seconds to stop.）

D.Speed light

F.Timer（15mins, 30mins, 60mins）

G.Nature song button

H .Timer light

J.Remote control signal receiver(Selective)

K.Battery door（Need 4 SIZE AA battery）

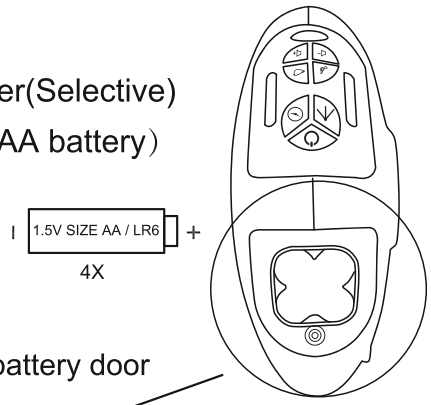

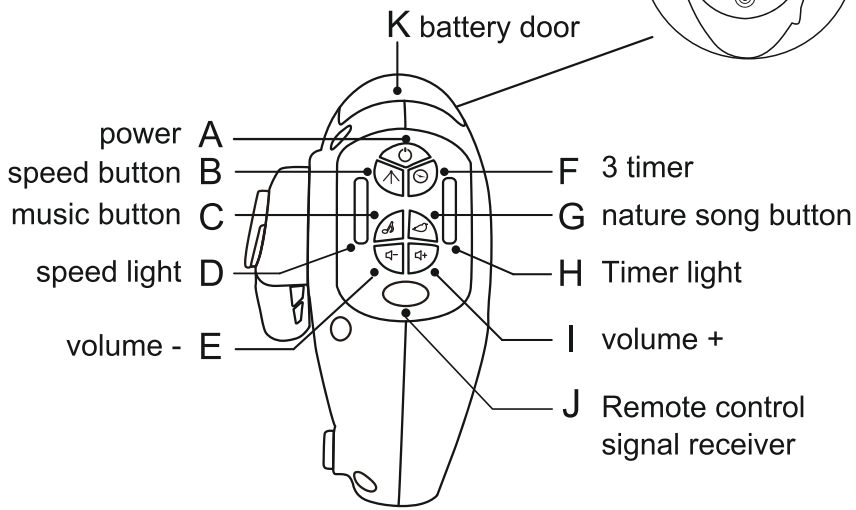

ASSEMBLY AND USE

1. As picture, insert the left tube of front support leg (E) into the right one, until a “click”. Follow same method for rear support leg (F).

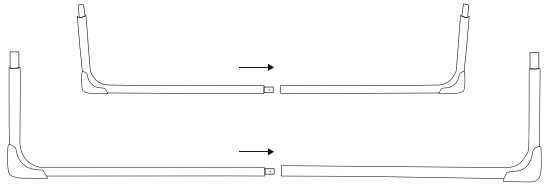

2. Open Left and Right Support Arch (C, D) as below picture shown until a “click”.

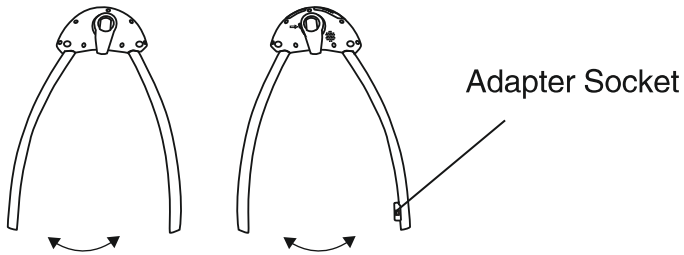

3. Combine the Arch Support groups (mentioned in step2) and support legs mentioned in step1 as below picture, until a “click” sound.

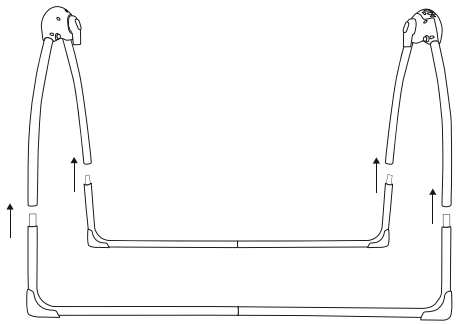

4. Unfold the bassinet (A) as below picture.

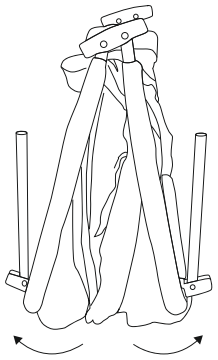

5. Insert the hanging tubes of bassinet into the connecting holes on the driving part groups, until a “click” sound.

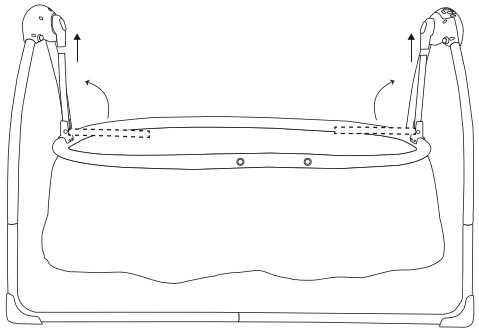

6. Assemble canopy and net (B), as below picture. Secure it by snaps located on the top of bassinet.

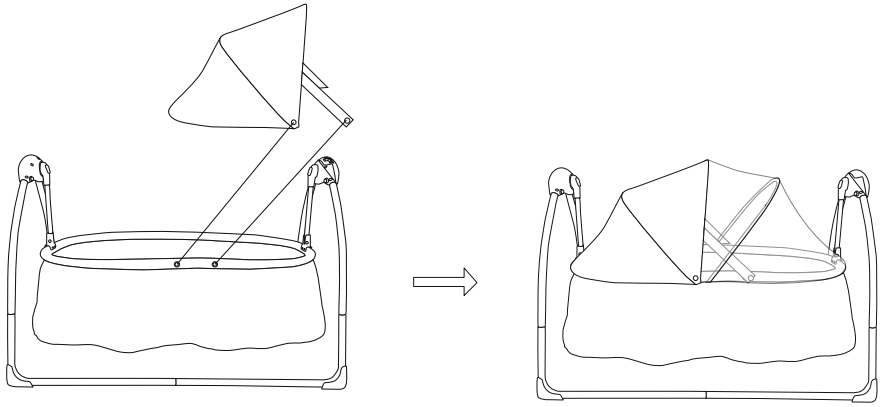

7. Press the lock button then the swing can stop swinging and release the lock button to make it swing again.

