R for Rabbit®
The Amazing Baby Company

Electric Cradle

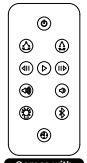

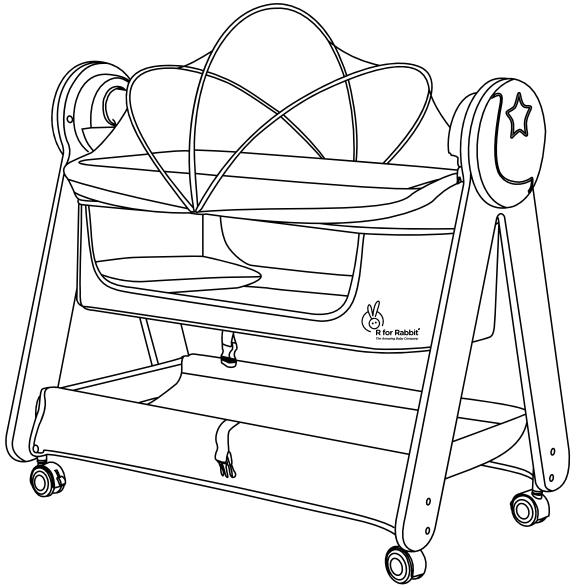

*Picture shown is for illustrative purposes only. Actual product may vary from image.
*Please note that toys are not included with this product.

LULLABIES WOODSY-ELECTRIC

Playful Electric Baby Cradle

Age Group
0-12 Months

Weight Capacity
Up to 12 kg

Installation & User Manual

IMPORTANT - KEEP THESE INSTRUCTIONS FOR FUTURE REFERENCE.
FAILURE TO OBSERVE THESE INSTRUCTIONS MAY AFFECT THE SAFETY OF YOUR CHILD!

INCLUDES

Please make sure that all the spare parts mentioned below are included in the box.


1


2


3


4


5


6


7


8


9


10

1. Headboard *2
2. Bassinet frame and cover *1
3. Basket frame with cover *1
4. Mosquito *1
5. Mattress *1
6. Pillow *1
7. Wheels *4
8. Bolt and nut C(M5*30)*4
9. Remote control *1
10. Data line *1

INSTALLATION STEPS

Step 1: Use M5*30 screws to install the bottom basket as shown in ref pic

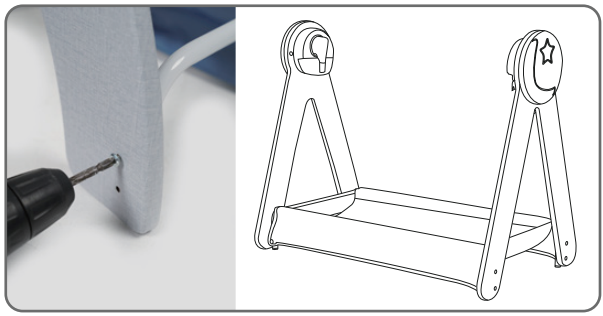

Step 2: Inset all 4 wheels into both frames

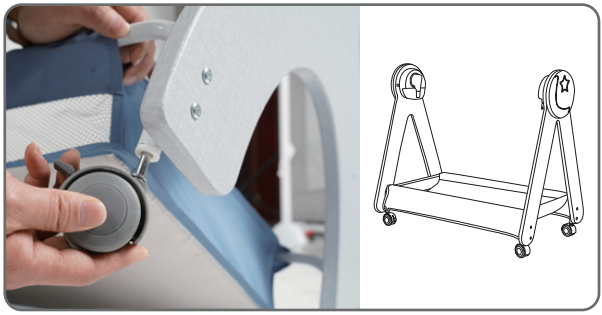

Step 3: Turn over the cradle right side up, and put in between of both frames. Post then insert the Cradle into swing arm.

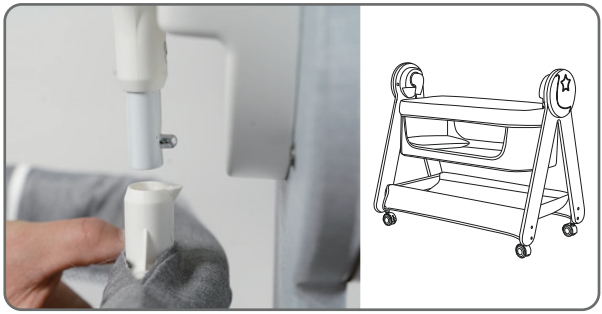

Step 4: Place the mattress with 3 point safety harness and pillow

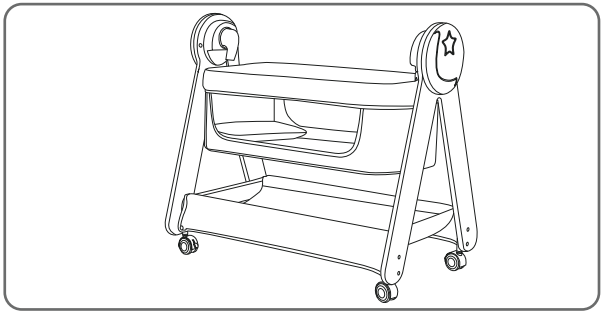

Step 5: Fasten the safety buckle given in bottom before use



Step 6: Fix the mosquito net

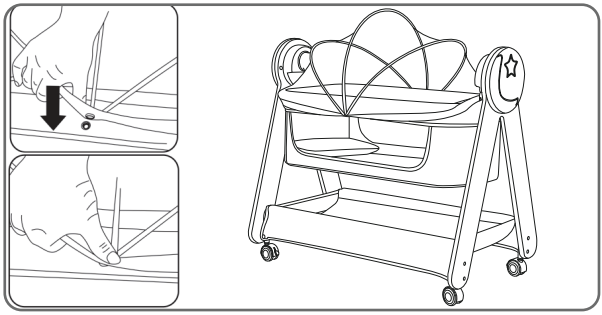

ELECTRIC FUNCTIONS

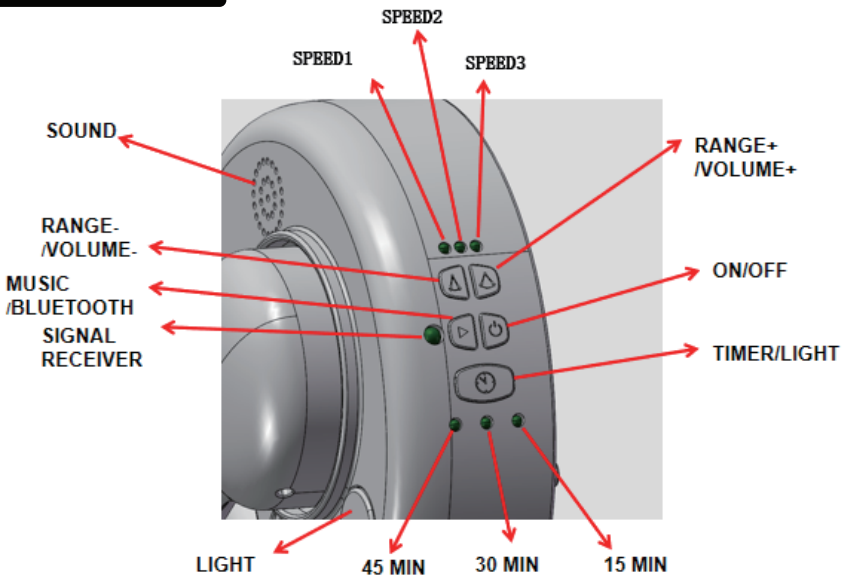

⏻ SWITCH ON / OFF

Long press "Power Switch" for 2 seconds to turn on/off the device, and the default speed is 2.

INCREASE SPEED OF SWING AND VOLUME CONTROL

Press the "△" button, the gear indicator will switch, until the third light indicator for speed is on, further the speed will not increase. To switch to lower speed press "△"

Long press "△" button to increase the volume and similarly press "△" to lower down the volume.

TIMER OPERATION

Press the" "button to activate the timing mode, and press this key continuously to cycle through the timing which will be indicated by the 3 lights.

1. First gear: 15 minutes
2. Second gear: 30 minutes
3. Third gear: 45 minutes

To turn off the night light, long-press the " "

MUSIC/BLUETOOTH

Short press the " "button to pause and proceed to the next song.
Long press the " " button for 2-3 seconds to enter Bluetooth mode. If the pairing process isn't completed within 2 minutes, the Bluetooth mode will automatically exit, returning to local music playback. If you prefer not to connect to Bluetooth, press and hold for an additional 2-3 seconds to revert to local music mode.

(Note: There are 10 inbuilt music tracks available.)

BLUETOOTH LINKED

To establish a Bluetooth connection, long-press the Bluetooth button. Your cellphone's Bluetooth interface will display the "P15-D" option. Select this option to establish the link.

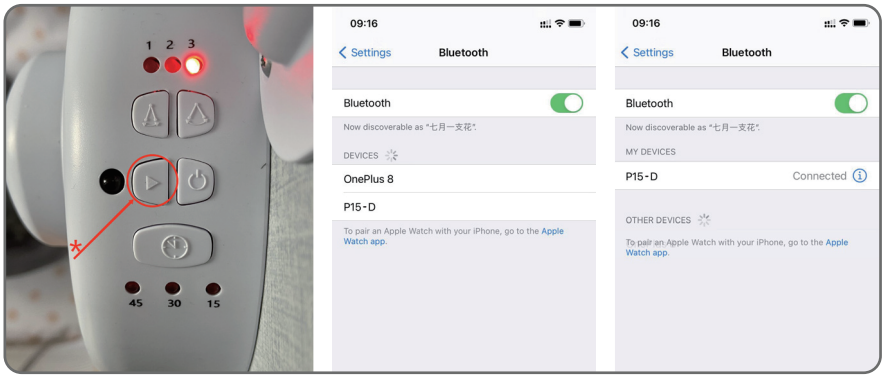

ELECTRONIC PART

Indicator light: There are 6 Indicator lights, 1 night light and 1 signal receiver

1. Three gear indicator lights, one indicator light for each of the three speed

2. 3 Timing indicator – which indicated the 3 timings (15, 30, 45 Seconds)

3. 1 Night Light

FUNCTIONAL DESIGN

1. Power on the DC power supply. Insert the DC plug into the DC jack of the swing, and the 2nd Speed indicator Light flashes for 3 seconds, and then goes off, and the product goes into standby mode.

2. After installing the AA battery, the indicator light of the 2nd speed will not light Up, and the product will go into standby directly.

POWER SUPPLY MODE

1. AA Battery Power Option
4 AA batteries can be used to power on the cradle. It can be used as temporary power source

2. USB DC Power Cable
The product is equipped with a USB-DC power cable, which can be connected to any mobile phone charger to power on the swing.

3. Power Bank Supply
The product is equipped with a USB-DC power supply cable, which can be connected to the power bank to power on the swing.

REMOTE CONTROL

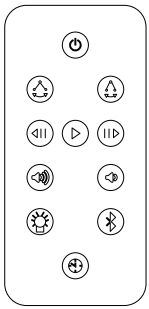

1. " " Press power button to start of shut down(Note: the remote control does not need to be turned on)

2. " " Press this button to increase the swing speed by one.

3. " "Press this button to reduce the speed by one

(Note: Speed - 1 = 8 to 12 degrees | SPEED 2 = 12-16 degrees: | SPEED 3= 16-20 degrees)

4. " " Tap to play the previous track

5. " " Press the button to Play/Pause

6. " " Tap to play the previous track

7. " "+: Press the button to increases the volume.

8. " " Press the volume – button to decrease the volume

9. " " Press the nightlight button to turn ON or Off the nightlight

10. " "Short press the Bluetooth button to enter the Bluetooth mode. If the pairing is not completed within 2 minutes, exit the Bluetooth mode and rectum to the local music playback

11. " " Press the "TIMING button" to turn on the automatic swing with timer. Press this key continuously to switch to different levels of timing

1 First Speed: 15 minutes

2 Second Speed: 30 minutes

3 Third Speed : 45 minutes

WARNING

Read this instruction carefully before using and keep it for future reference. Failure to follow these warnings and the assembly instruction could result in unwanted injury.
Product need to be installed by adult and used under adult's supervision.

1. Do not use the product if any parts are broken, torn or missing.
2. Always use harness.

3. Never leave child unattended.

4. Stop using product when child attempts to climb out or reaches 12kg weight.

5. It is dangerous to place this product on an elevated surface. Always use on a flat or level floor.

6. Be aware of the risk of open fire and other sources of strong heat, such as electric bar fires, gas fires, etc. In the vicinity of the product.

7. Do not use the product without the seat cushion.

8. Discontinue using your product if it is damaged or broken.

FOR SAFE BATTERY USE

1. Keep the batteries out of children's reach.

2. Only the recommended batteries equivalent in volt and size are to be used.

3. Batteries are inserted with the correct polarity.

4. Remove exhausted batteries from the product.

5. Do not short-circuit supply terminals.

6. Rechargeable batteries are to be removed before being charged.

7. Rechargeable batteries are only to be charged under adult supervision.

8. Any battery may leak battery acid if mixed with a different battery type, if inserted incorrectly (put in back-wards) or if all batteries are not replaced or recharged at the same time. Do not mix old and new batteries. Do not mix alkaline, standard (carbon-zinc) or rechargeable(nickel-cadmium) batteries.

9. Any battery may leak battery acid or explode if disposed of in fire or an attempt is made to charge a battery not intended to be recharged.

10. Never recharge a cell of one type in a recharger made for a cell of another type.

11. Discard leaky batteries immediately. Leaky batteries can cause skin burns or other personal injury. When discarding batteries, be sure to dispose of them in the proper manner, according to your state and local regulations.

12. Always remove batteries if the product is not going to be used for a month or more.
Batteries left in the unit may leak and cause damage.

R for Rabbit®
The Amazing Baby Company

Imported & Marketed By:
R FOR RABBIT BABY PRODUCTS PVT. LTD.
307, 3rd Floor, Pinnacle Business Park, Corporate Road,
Prahladnagar, Ahmedabad, Gujarat, India-380015
For Customer Complaints/Feedback:
+91-734-834-0934 / 734-834-9340
www.rforrabbit.com
customercare@rforrabbit.com
Find us on :

For Installation Video

Scan QR or Visit YouTube

Search for Product Details

R for Rabbit Lullabies Woodsy Electric